F4S 10 Water Management System

Assembly, Installation & Commissioning Instructions

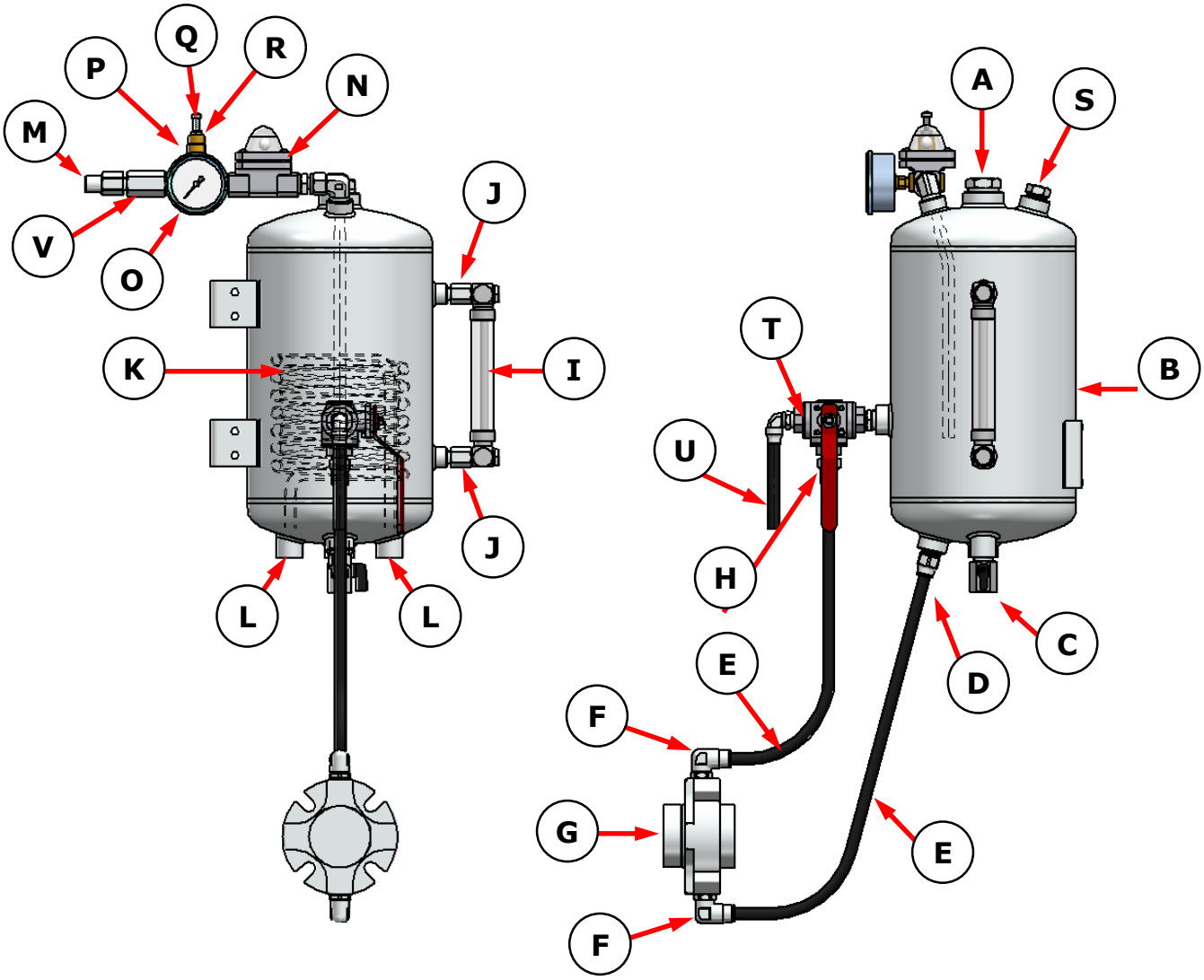

A = Spare connection
B = Pressure vessel
C = Drain valve
D = Seal supply connection
E = Seal supply/return hose
F = Seal fittings
G = Mechanical seal
H = Seal return connection
I = Sight glass
J = Sight glass thread adaptor
K = Cooling coil (option)

L = Cooling coil inlet/outlet (option)
M = Water supply connection
/non return valve
N = Flow indicator
O = Pressure gauge
P = Pressure regulator
Q = Pressure regulator screw
R = Regulator lock nut
S = Spare connection
T = 3 way valve
U = Vessel drain hose

US Spec = ½" fittings and connections
European Spec = 12mm fittings and connections

AESSEAL Marine plc, Unit 4 Venlo Industrial Estate, Knowles Street, Bradford BD4 6HA, UK
Tel: +44 (0) 1274 720775 - Fax: +44 (0) 1274 729022
Email: seals@first4seals.com - Web: www.first4seals.com

Assembly

1. Fit **Ball Valve** into centre port on bottom of vessel

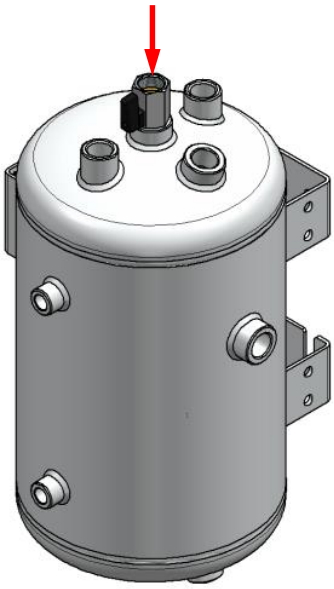

2. Fit **Seal Supply Connection** into the angled port on bottom of vessel as shown

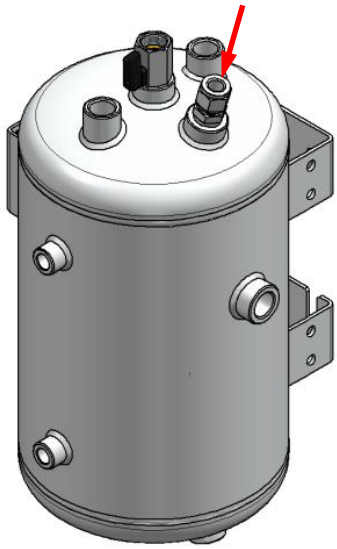

3. Fit large **Blanking Plug** into largest port on top of vessel

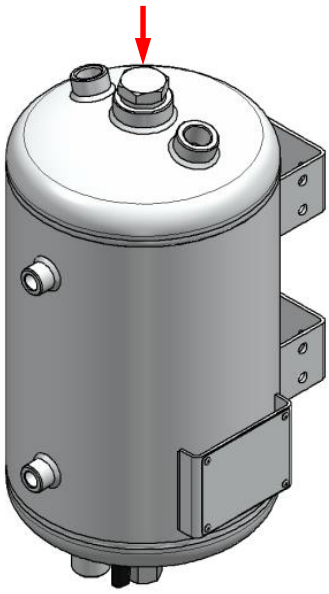

4. Fit small **Blanking Plug** into port on top of vessel as shown

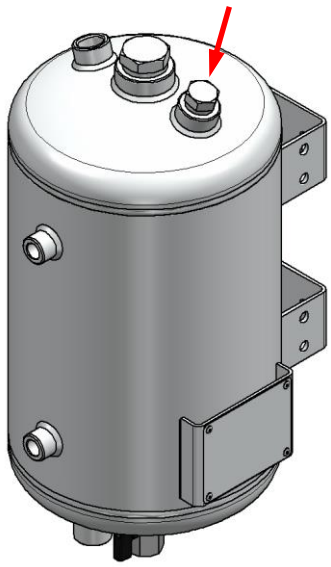

5. Fit **Sight Glass** into 2 off small ports on side of vessel using 2 off **Thread Adaptors**

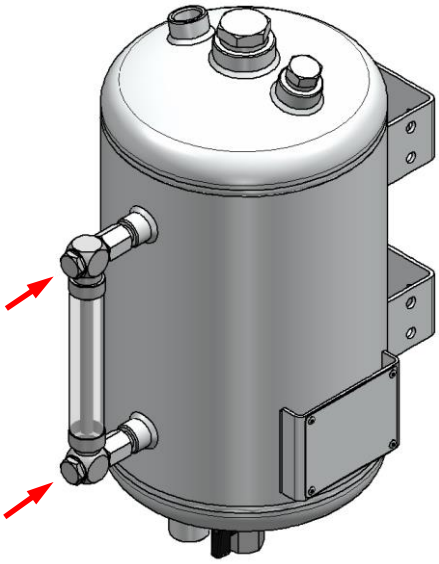

Sight Glass Installation

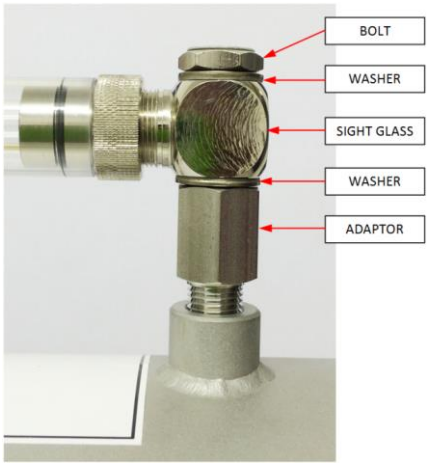

6. Fit **Regulator Assembly** into the remaining port on top of vessel marked 'FILL'

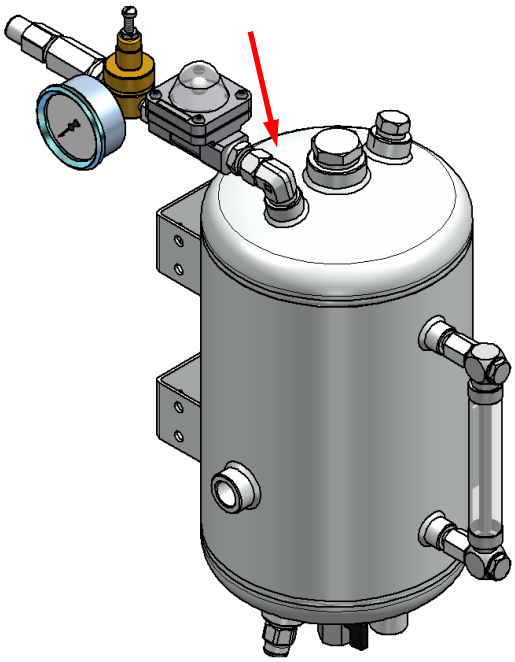

7. Fit **3 Way Valve Assembly** into the remaining port on the side of vessel

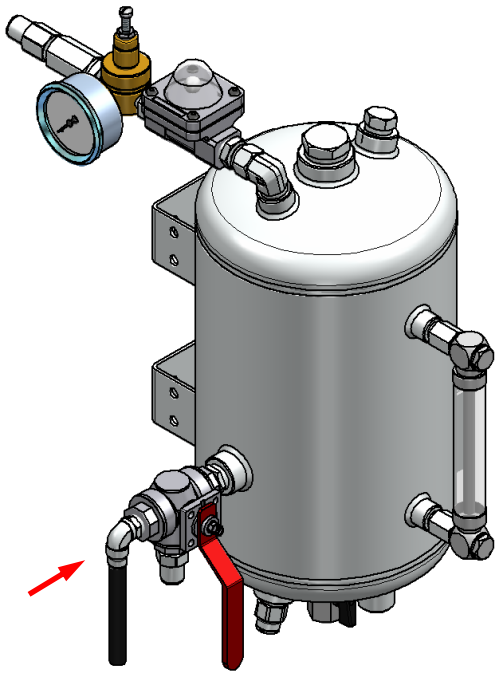

Note: Ensure the system is completely leak free before full operation. Use suitable pipe thread sealant if required.

Installation

Step 1 – Vessel Installation

- Mount the f4s-10 system vessel within 1000mm/40” horizontally and between 500mm/20” and 2000mm/80” vertically above the mechanical seal. Ensure the location selected is free from vibration and allows easy access for maintenance.

Step 2 - Cooling Coil – (If not included in vessel supplied go to Step 3)

- Isolate cooling coil water supply.
- Use own tubing and fittings to connect Cooling Coil Inlet Port to water supply and Cooling Coil Outlet Port to drain. Either cooling coil port (located on bottom of vessel) can be used for the inlet or outlet.
- Turn on cooling coil water supply.

Step 3 – Seal Connection Kit – (If not included with system supplied go to Step 4)

- Connect one length of tubing to the Seal Return Port on the side of the vessel using connection supplied.
- Connect one length of tubing to the Seal Supply Port on the bottom of the vessel using connection supplied.
- Connect tubing to seal using connections provided. Ensure seal return pipe does not sag. Refer to relevant mechanical seal installation instructions for inlet/outlet port orientation.
- Go to **Step 6.**

Step 4 – Finned Tubing – (If not included with system supplied go to Step 5)

- Connect one length of finned tubing to the Seal Return Port on the side of the vessel using connection supplied.
- Connect one length of finned tubing to the Seal Supply Port on the bottom of the vessel using connection supplied.
- Use own hard piping and supplied connections to connect the finned tubing to the seal. Ensure seal return pipe does not sag. Refer to relevant mechanical seal installation instructions for inlet/outlet port orientation. Note: The tubing and connections used must be suitable for the efficient use of the mechanical seal. The recommended tubing size is 10mm/3/8” minimum inner diameter and 12mm/1/2” minimum outer diameter. Minimum Pressure Rating: 10bar/145psi at 70°C/158°F, Minimum Temperature Rating: -20°C/-4°F.
- Go to **Step 6.**

Step 5 – Connect seal to f4s-10 vessel using own tubing and connections

- Note: The tubing and connections used must be suitable for the efficient use of the mechanical seal. The recommended tubing size is 10mm/3/8” minimum inner diameter and 12mm/1/2” minimum outer diameter. Minimum Pressure Rating: 10bar/145psi at 70°C/158°F, Minimum Temperature Rating: -20°C/-4°F.
- Fit one length of tubing to the Seal Return Port on the side of the vessel using a suitable connection.
- Fit one length of tubing to the Seal Supply Port on the bottom of the vessel using a suitable connection.
- Connect tubing to seal using suitable connections. Ensure seal return pipe does not sag. Refer to relevant mechanical seal installation instructions for inlet/outlet port orientation.

Step 6 – Fill Vessel

- Isolate vessel water supply.
- Turn Pressure Regulator Screw fully anticlockwise.
- Connect the water supply to the Water Supply Connection.
- Disconnect tubing at Seal Return Port on vessel.
- Turn on the vessel water supply and begin to slowly fill the vessel.
- The barrier fluid will begin to flow out of the disconnected seal return tubing. Continue to slowly fill the vessel until all traces of air have been removed from the outflow.
- Reconnect tubing to Seal Return Port and fully turn on the vessel water supply.
- Adjust Pressure Regulator Screw to set the required barrier fluid pressure on the Pressure Gauge.
- Barrier fluid pressure should be set at 1bar/14.5psi above product pressure, however the system can only use the water pressure available in the plant water line.
- When the required barrier fluid pressure is shown on the Pressure Gauge tighten the Regulator Lock Nut.
- Ensure vessel water supply remains on after commissioning is complete.
- During normal operation the Flow Indicator will indicate if there is a problem with the seal. If a problem arises the ball inside the indicator will be visibly moving. This ball should not be seen moving during normal operating conditions, although it will be seen on initial vessel fill due to the water entering the vessel.
- Note: Where the installation is vertical it is possible that air may become trapped in the highest area of the seal. If possible the seal should be primed in a horizontal position before installation.

Step 7 – System Checks

- Ensure all connections and tubing are free from leakage.
- Ensure return tubing from seal to the vessel does not sag.
- Ensure barrier fluid is circulating in the correct direction. During equipment use the tubing from the seal to the Seal Return Port on the side of the vessel must be hotter than the seal supply tubing. The connections must be reversed if required to ensure correct operation.

Health & Safety

- This system has been designed for use only as a barrier fluid system for mechanical seals using a suitable non-hazardous barrier fluid.
- Electrical connections must be made in compliance with applicable legislation and/or local requirements by a competent/qualified electrician.
- Pipe relief valves discharge to safe area.
- Do not over-pressurise the system beyond the maximum design pressure. If there is any possibility of over-pressurisation the system must be fitted with a suitable protection device.
- Do not exceed the operating limits of the system. Not designed for cyclic loading.
- The system may get hot in operation with risk of burn injury. Suitable engineering controls or guarding should be adopted where necessary.
- Ensure the system is completely leak free before full operation.
- If the barrier fluid becomes contaminated it is recommended that the barrier fluid is replaced taking necessary precautions.
- Isolate the process and power on installation, maintenance and decommissioning (and ensure that the system pressure has been relieved before undertaking maintenance)

Environment

At end of life the barrier fluid and system should be disposed of in accordance with local regulations and with due regard to the environment.

Maintenance

The system should be maintained in accordance with site standards. Ensure vessel water supply remains on after commissioning is complete.

After 5 years

We also recommend that after 5 years a complete internal and external inspection is conducted of the vessel, and all the systems component parts.

Operating Limits

• Maximum Pressure = 10 bar/145 psi
• Maximum Temperature = 80°C/176°F
• Minimum Temperature = -20°C/-4°F
(Water applications = 0°C/32°F)

Vessel Maximum Volume

• 10 litres/2.64 gal (US)

Design Codes

• ASME VIII Div.1 2007, 2008a
• Pressure Equipment Directive (2014/68/EU)

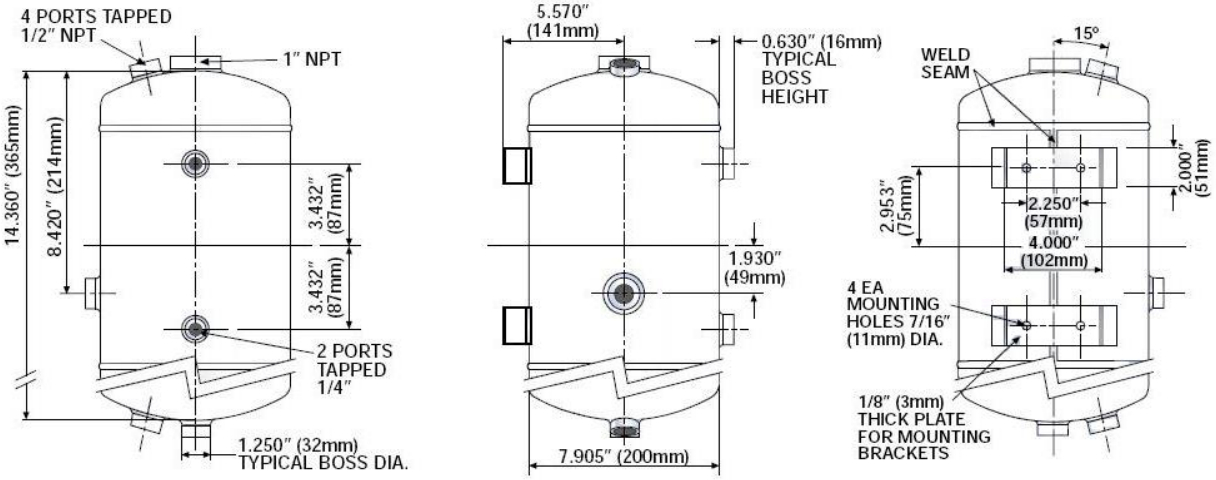

DECLARATION OF INCORPORATION
This mechanical seal must not be put into service until the relevant machinery into which it is incorporated has been declared to be in conformity with the provisions of the Machinery Directive.